SH M0011C

Economical Monitor Arm

Fits most 17"-27" LCD/LED Monitors

A mounting solution

for any size wallet

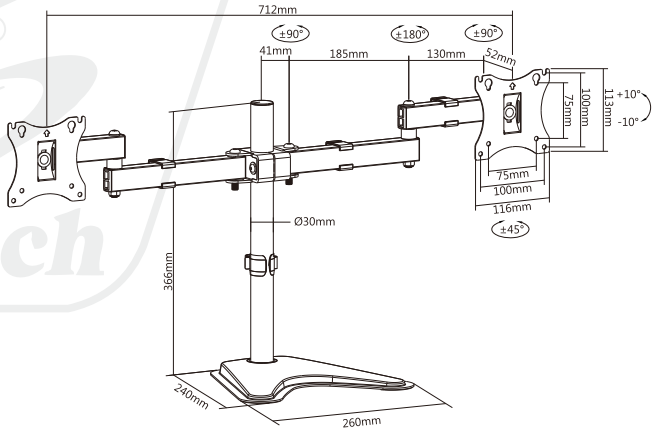

Screen Size	Weight Capacity	VESA Compatible	Tilt Range	Swivel Range	Screen Rotation	Cable Management
17"-27"	7kg/15.4lbs(x2)	75x75 100x100	+10° ~ -10°	+90° ~ -90°	+45° ~ -45°	

Keyhole Pattern
allows for easy installation.

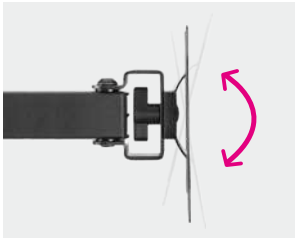

Easy-grip Knob
for quick tilt and lock.

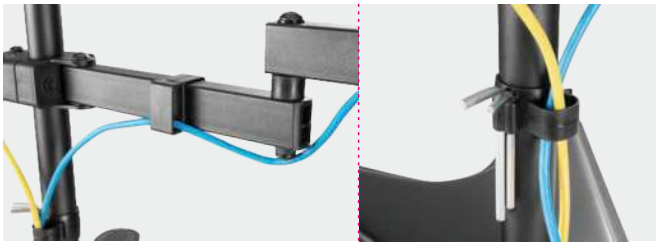

Cable Clips
keep everything organized.